Rod

mild steel

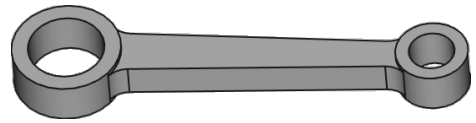

Use MF106 and MF63 bearings in the big end and small end, respectively.

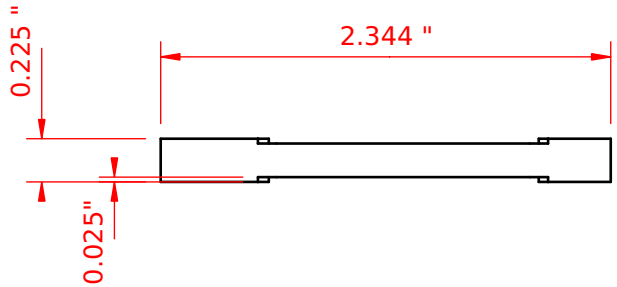

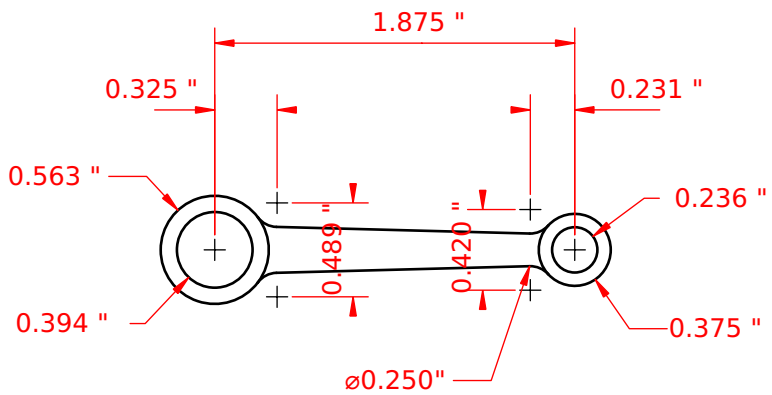

Construction Note:

With the rod angled a 1.5°, use a .25” endmill, positioned as shown, to cut the angled flank.

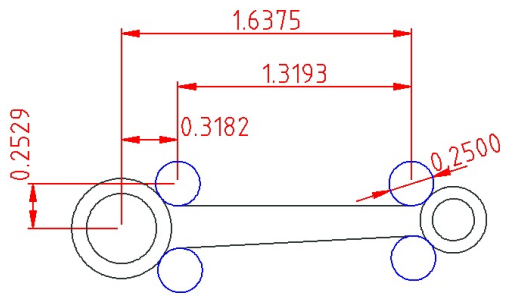

Designed by	Scale	Default Dim.	Title	Sheet	Revision	Date
Andrew H. Wakefield	1:1	+/- .001"	Modular Tower Engine	7	1.3	7/24/2020