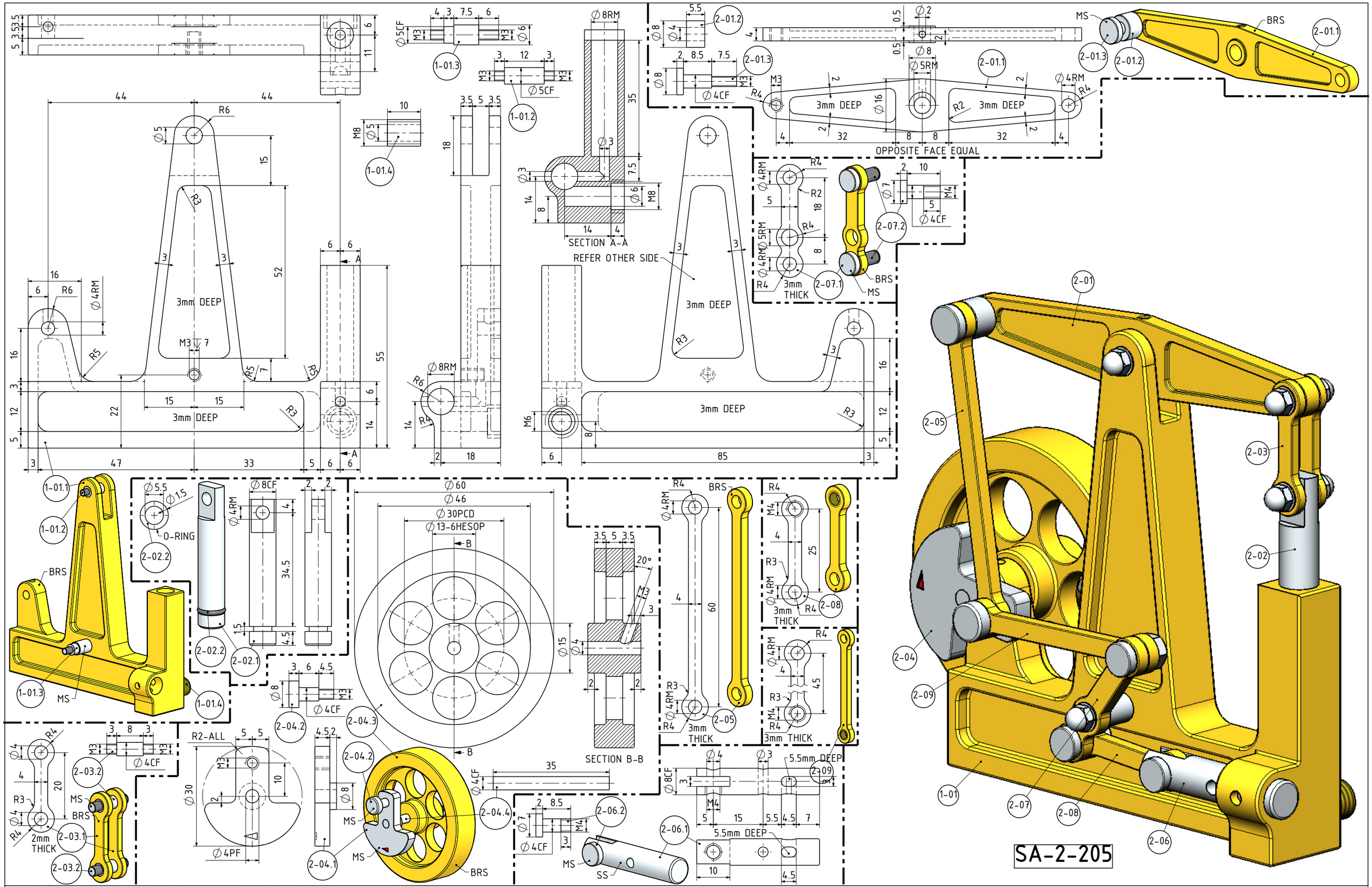

NOTES: THIS DESIGN IS BASED ON SOME PICTURES WHICH I FOUND ON THE INTERNET.

TITLE A VERY SIMPLE 1 CYL. BALANCED BEAM STEAM ENGINE (BORE=8mm STROKE=20mm)	DRAWING CONTENTS PARTS AND ASSEMBLIES	PROJECT No 09E-57-00 JDW DRAUGHTING SERVICES J.A.M. DE WAAL. 12 BRIGHTWELL STREET PAPAKURA 2110. NEW ZEALAND. PHONE: 0064 09 2988815. MOB: 0211791000 E-MAIL: dewaal@xtra.co.nz.	PROJECTION JDWDS DATE OCTOBER 2021 SHEET: 02 OF 02 A3
			MODEL SCALE: 1:1 DWG SCALE: 1:1 @A3 OR AS SHOWN Copyright © J.A.M. DE WAAL PAPAKURA NZ No: 09E-57-00-SHT-02

DRAWINGS ARE FOR PERSONAL USE ONLY NOT FOR COMMERCIAL PURPOSES