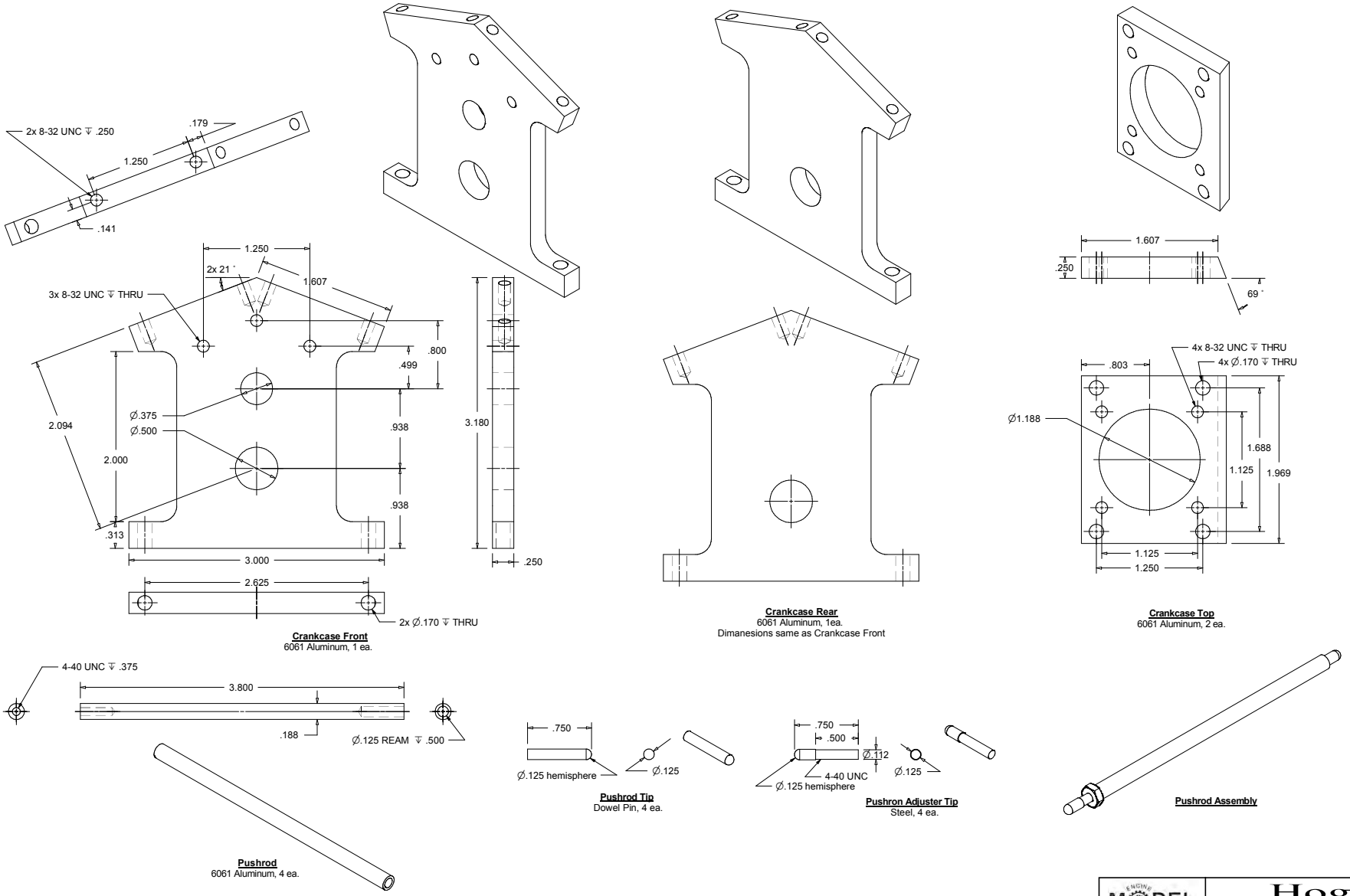

Break or deburr edges
unless otherwise specifie

DIMENSIONAL TOLERANCES UNLESS OTHERWISE SPECIFIED

METRIC	IMPERIAL
1 PLACE ±0.3	2 PLACE ±0.01
2 PLACE ±0.03	3 PLACE ±0.001
3 PLACE ±0.005	4 PLACE ±0.0005

MODEL ENGINEER BUILDER

Edited by
Mike Rehmus
© 2007 by
Elmwood Publishing, Inc.

Hoglet

DESIGNED BY
Randall Cox

DWG 6 OF 12

Do Not Scale

Drawn by
Robert Sigler

3rd ANGLE PROJ.