ITEM NO.	PART NAME	QTY.
1	CLCR8 Stat Panel Assembly	1
2	CLCR8 Woofer Grill	2
3	CLCR8 Cabinet Left With Electronics Assembly	1
3.14	CLCR8 Wire Grommet	2
3.15	M4 x 7mm Mold In Insert	2
4	CLCR8 Cabinet Right With Electronics Assembly	1
5.1	CLCR8 Cabinet Bridge	2
5.2	CLCR8 Bridge Cover	2
5.4	M4 x 12mm SHCS Plastic Thread	12
6	CLCR8 Tweeter Bezel	1
7	Tweeter Vifa Logic BC25SC15-04 No Heat Sink	1
8	CLCR8 Tweeter Housing	1
9	CLCR8 Tweeter Grill	1
10	CLCR8 Trim Extrusion	2
11	CLCR8 Stand Assembly	1
11.2	CLCR8 Stand Hand Nut	2
12	CLCR8 Gasket Tweeter Housing	1
13	CLCR8 Gasket Tweeter Stat Bezel Grill	1
14	CLCR8 Gasket Tweeter Bezel Grill	1
15	M4 x 12mm Flange PH Plastic	2
16	M4 x 16mm SHCS Flat	4
17	M3 x 14mm SHCS Self Tap	4
18	M4 x 30mm SHCS JCB	8

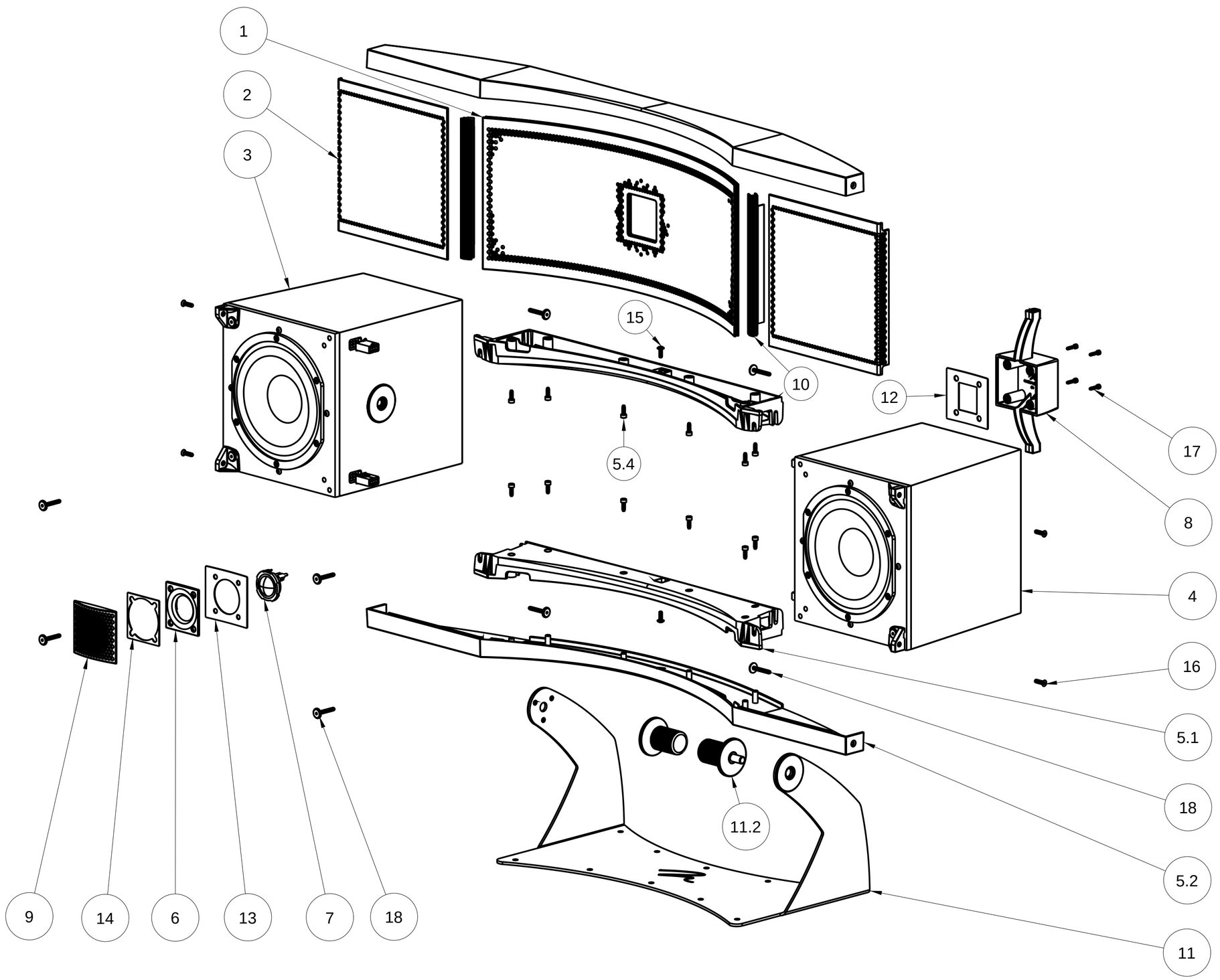

MARTIN LOGAN Ltd.
2101 Delaware Street
Lawrence, Kansas
66046, USA
Phone 785.749.0133/Fax 785.749.5320

FILE NAME: CLCR8 Speaker Exploded

DRAWN: John Scott DATE: Jan. 12, 2006

UNLESS OTHERWISE SPECIFIED DIMENSIONS ARE IN MILLIMETERS AND TOLERANCES ARE:
DECIMALS: Ñ .15 ANGLES: Ñ .5 Á

DO NOT SCALE DRAWING

MATERIAL:

FINISH:

ML PART #: REV. 000

THE INFORMATION CONTAINED IN THIS DRAWING IS THE SOLE PROPERTY OF MARTIN LOGAN ANY REPRODUCTION IN PART OR WHOLE WITHOUT THE WRITTEN PERMISSION OF MARTIN LOGAN IS PROHIBITED.