RECORD POWER
SHEFFIELD - ENGLAND®

DML24X-MK2
24” Beginners Woodturning Lathe

Instruction Manual

IMPORTANT
For your safety read instructions carefully before assembling this product. Save this manual for future reference.

Woodworking Machines & Accessories
Telephone: 0870 770 1777
Facsimile: 0870 770 1888
Email: sales@recordpower.co.uk
http://www.recordpower.co.uk

Dear Customer,
Thank you for investing in a RECORD POWER® WOODTURNING LATHE. Like all our products, it is made to the highest production standards and is designed to give you years of satisfying service.
A complete list of accessories to enhance your enjoyment of woodturning is included at the back of this manual.
Please do not forget to fill in and return your guarantee card. (This does not affect your statutory rights).

PURPOSE OF THIS MANUAL

Please ensure you have sufficient basic skill before using this machine.
This manual serves to give details of Specification, Health & Safety, Installation & Assembly.
It does not serve to teach you the art and skill of Woodturning. This is best done by either attending a course run by a skilled woodturner, obtaining one of the many publications on the subject or by viewing our website (www.recordpower.co.uk) where you can find various woodturning tuition articles and projects.

RECORD POWER AND THE ENVIRONMENT

Considerations of environmental issues are an integral part of the design, production and other associated aspects of this product, and all reasonable environmentally friendly options have been adopted throughout.
Users are advised to consider environmental issues associated with the use of this product, particularly when considering workpiece material. Confirmation of sourcing from well-managed forests is advisable whenever practically possible.
This product is designed to have a long and useful life and to be passed down from generation to generation. However, should the unlikely need arise to dispose of this lathe or any part thereof please recycle where facilities exist.
To assist you in the disposal of this product / component in an environmentally friendly way, below are listed the materials of the product's main components.

Headstock - Belt Guard - Motor & Spindle Pulleys	Cast Iron
End Brackets - Tool Rest Base	Cast Iron
Square/Plain/Angle Straps - Toolrest	Cast Iron
Tailstock - Handwheel - Swivel Saddle	Cast Iron
Main Spindle - Tailstock Barrel	Steel
Centre/2 spur centre - Toolrest stem	Steel
Bed Tubes	Steel – Zinc Plated
Motor - Motor Plate	Steel frame, copper windings, cast iron
Ratchet handles - Tailstock lock knob	Glass filled Nylon, Steel
Cable, wires	Rubber, copper core
Switch assembly	Various plastics, copper fittings
Plug	Various plastics, brass fittings

Record Power Guarantee

Terms and conditions

Record Power guarantees the mechanical parts of its machines against faulty construction for a period of 5 years from date of purchase. The guarantee is limited to the obligation to repair or replace any parts which prove to be faulty.
All motors, electrics and electronic equipment have a guarantee period of 6 months.
It is understood that in all cases the guarantee does not entitle the customer to any refund for damages, interruption of work or any indirect damage.
Parts will only be replaced if found faulty through a manufacturing defect.
The guarantee does not cover the replacement of worn consumable parts such as belts, bearings, cogs, wheels and blades which will all need replacement over time dependent on use, loading and maintenance of the machine.

Please note the guarantee does not cover
- Accidental damage
- General wear and tear of mechanical parts
- Incorrect electrical connection
- Any unapproved machine modification
- Failure to follow manufacturers instructions
- If machine is used for any material other than that specified in the manufacturers handbook.

No claim for damage in transit will be entertained if goods are not signed for as damaged

Unless stated otherwise, the machines are not intended for continuous industrial use, doing so will invalidate the guarantee.

Claims for the recovery of carriage incurred returning the product, will only be entertained if the product has been demonstrated to fail because of a manufacturing defect.

All guarantee claims should be made through the supplying dealer and must accompanied by proof of purchase.

Contents

1. HEALTH & SAFETY GUIDANCE
2. ADDITIONAL SAFETY INSTRUCTIONS FOR LATHES
3. SPECIFICATION
4. ASSEMBLY INSTRUCTIONS
5. CONTROL IDENTIFICATION AND FUNCTION
6. PROCEDURE FOR CHANGING SPEED
7. PROCEDURE FOR CHANGING BELT
8. SPARE PART IDENTIFICATION

1. Health & Safety Guidance

READ ALL THE INSTRUCTIONS IN THIS MANUAL CAREFULLY BEFORE ASSEMBLY, INSTALLATION AND USE OF THIS PRODUCT.
KEEP THESE INSTRUCTIONS IN A SAFE PLACE FOR FUTURE REFERENCE.

WARNING: When using electric tools, basic safety precautions should always be followed to reduce the risk of fire, electric shock and personal injury.

SAFE OPERATION

1. Eye Protection
The operation of any power tool can result in foreign objects being thrown into your eyes, which can result in severe eye damage. Always wear safety glasses or other suitable eye protection. Wear safety glasses at all times. Everyday glasses only have impact resistant lenses. They are not safety glasses which give additional lateral protection.

2. Keep work area clear.
Cluttered areas and benches invite accidents and injuries.

3. Consider work area environment.
Do not expose the machine to rain or damp conditions.
• Keep the work area well lit.
• Do not use the machine in the presence of flammable liquids or gases.

4. Guard against electric shock.
Avoid body contact with earthed or grounded surfaces.

5. Keep other persons away (and pets).
Do not let persons, especially children, not involved in the work, touch the machine, or extension cord (if used) and keep visitors away from the work area.

6. Store idle tools.
When not in use, tools should be stored in a dry locked- up place, out of reach of children.

7. Do not force the machine.
It will do the job better and work more safely if operated at the speed at which it was intended.

8. Use the right tool.
• Do not force small tools to do the job of a heavy-duty tool.
• Do not use tools for purposes not intended.

9. Dress properly.
• Non-slip footwear is recommended.
• Do not wear loose clothing, neckties or jewelry; they can be caught in the moving parts.
• Roll up long sleeves above the elbow.
• Wear protective hair covering to contain long hair.

10. Use protective equipment
• Use safety glasses. (See note 1. above)
• Use face or dust shield if cutting operation creates dust.

11. Connect dust extraction equipment.
(See sectio 2. note 25)

12. Do not abuse the cord.
Never yank the cord to disconnect it from the socket. Keep the cord away from heat, oil and sharp edges.

13. Secure work.
Ensure that your work piece is properly fixed before commencing to cut.

14. Do not overreach.
Keep proper footing and balance at all times.

15. Maintain tools with care.
• Follow instructions for lubrication and changing accessories.
• Inspect electric cords periodically and, if damaged, have them repaired by an authorized service facility.
• Inspect extension cords (if used) periodically and replace if damaged. Always use proper size extension cord.

16. Disconnect Machine.
When not in use, before servicing etc, disconnect the machine from the power supply.

17. Never leave machine running unattended.
Turn power off, do not leave machine until it comes to a complete stop.

18. Remove adjusting keys and wrenches.
ENSURE chuck key is removed from chuck before switching the machine 'ON', any adjusting wrenches should also be removed from the machine.

19. Avoid unintentional starting.
- Ensure the switch is in the "OFF" position before turning on the power from the main electricity supply.

20. Out-door Extension Leads.
Your lathe should not be used outdoors.

21. Stay alert.
Watch what you are doing, use common sense and do not use the morticer when you are tired.

22. Check for damaged parts.
• Before use of the machine, it should be carefully checked to determine that it will operate properly and perform its intended function.
• Check for alignment of moving parts, binding of moving parts, breakage of parts, mounting and any other conditions that may affect its operation.
• A guard or other part that is damaged should be properly repaired or replaced by an authorized service center unless otherwise indicated in this instruction manual. -
Have defective switches replaced by an authorized service centre.
• Do not use the machine if the switch does not turn on and off.

23. Warning!
• The use of any accessory or attachment, other than one recommended in this instruction manual, or recommended by our Company may present a risk of personal injury.

24. Have your machine repaired by a qualified person.
• This electric machine complies with the relevant safety rules. Only qualified persons using original spare parts should carry out repairs. Failure to do this may result in considerable danger to the user.

Maintenance and Servicing
This machine requires very little maintenance. This handbook gives clear instructions on installation, set up and operation. Read these instructions carefully. Remember always to switch off and unplug from the main electricity supply before carrying out any setting up or maintenance operations.

Should you need advice on repair or maintenance on this product, our Customer Service Department would be happy to assist you.

2. Additional Safety Instructions For Woodturning Lathes

SAFETY IS A COMBINATION OF OPERATOR COMMON SENSE AND ALERTNESS AT ALL TIMES WHEN THE LATHE IS BEING USED.

WARNING: For your own safety, do not attempt to operate your lathe until it is completely assembled and installed according to the instructions.

SAFE OPERATION

1. Lathe and motor must be bolted down to a stand or workbench for stability.

2. Before attaching workpiece to faceplate always “rough-out” to as “true round” as possible. This will minimise vibration while turning.

3. Always rough out “out of round” workpieces at slow speed. Running lathe too fast could cause workpiece to be thrown from lathe or turning tool to be jerked from your hands.

4. Always rotate workpiece by hand before starting the lathe. If workpiece strikes tool rest, it could be split and thrown out of the lathe.

5. Do Not allow turning tool to “bite” into workpiece, which could result in splitting or ejection of workpiece from lathe. Always position tool rest at the correct height such that the tool cutting edge is on or above workpiece centre.

6. Do Not apply turning tool to workpiece below centreline of lathe.

7. When using faceplate always ensure workpiece is well secured.

8. Avoid awkward hand positions, where a sudden slip could cause a hand to move into workpiece.

9. Remove all loose knots and bark before installing workpiece.

10. If turning tools are stored near lathe, hang them on wall near tailstock end of lathe. Do not lay them on bench so that you must reach over revolving workpiece to select them.

11. Keep firm hold and control of the turning tool at all times. Use extreme caution when knots and voids are exposed. Turning tool could be grab and be thrown, or dig into workpiece and break it apart.

12. Find and read the WARNING label incorporated within the Machine Label mounted on the lathe motor.

13. Finish all hand sanding BEFORE removing workpiece from lathe. Do not exceed speed used for last cutting operation.

14. DO NOT remount faceplate turned workpiece to faceplate unless you are deliberately turning eccentric work.

15. DO NOT remount between-centres turning if original centres have been altered or removed, unless you are deliberately turning eccentric work. Set to lowest speed when remounting a between-centres turning.

16. Use extra caution when mounting a between-centres or spindle turning to faceplate, or a faceplate turning to between-centres, for subsequent operations. ENSURE lathe is set at lowest speed before switching ON.

17. DO NOT mount a workpiece that contains excessive splits, shakes, or loose knots to a faceplate or between centres.

18. DO NOT perform any operations when hand holding the workpiece.

19. DO NOT mount a reamer, milling cutter, wire wheel, buffing wheel, drill bit or any other tool to headstock spindle.

20. ALWAYS ensure that the turning tool is in contact with the tool rest before commencing the cut.

21. When the tool rest base unit is not in use (as when sanding), it should be moved away from the headstock, and the tool rest removed.

22. It is normal for the motor to run hot. Therefore care should be taken to avoid touching the motor, particularly when changing speed.

23. Warning Labels – It is important that labels bearing Health & Safety Warnings are not removed or painted over. New labels are available from Customer Services.

24. Mechanical Safety – The security of all clamps, guards and work holding devices should be checked before switching on.

25. Wood Dust – The fine particles of dust produced in sanding operations can be a long-term health hazard if excessive. Some woods do give off irritant dust that may cause a burning sensation. We therefore strongly recommend the use of a dust collector on your lathe and suitable dust mask / visor. Our Customer Services will be happy to advise you on the correct unit for your needs.

26. Machine falls under the scope of the ‘Health & Safety at Work etc. Act 1974’, and the ‘Provision & Use of Work Equipment Regulations 1998’. We recommend that you study and follow these regulations. Further guidance can be found in the Safe Use of Woodworking Machinery code of practice booklet (L114) published by Health & Safety Executive.

For further help on any of the above matters please contact our Customer Services Department at :-
Tel: 0870 770 1777 Fax: 0870 770 1888

WARNING: Do not allow familiarity (gained from frequent use of your machine) to become commonplace. Always remember that a careless fraction of a second is sufficient to inflict severe injury.

3. Specification

Max distance between centres	24” (610mm)
Max bowl Dia. over bed	9” (229mm)
Max spindle Dia.	6” (152mm)
Motor	230 V 50Hz 2.5A Capacitor start & run drip proof type
Motor Power	430w (p1) 250w (p2)
Motor Speed	1425 min-1
Noise emission	< 85dB(A)
Spindle Speeds	450, 950, 1500, 2000
Drive	Poly V belt
Main Bearing	Deep groove ball
Spindle Nose	3/4”ø whit. x 16tpi
Overall Dimensions	
Length	51” (1295mm)
Depth	12” (305mm)
Height	11 3/4” (298mm)
Weight	40kg

HEADSTOCK SPINDLE AND TAILSTOCK BARREL BORED TO SUIT NO.1 MORSE TAPER SHANK. SPINDLE FLATTED TO SUIT 9/16" WHITWORTH. WRENCH TO FACILITATE FITTING AND RELEASE OF SPINDLE NOSE ATTACHMENTS SUPPLIED.

4. Assembly Instructions

Unpacking

NOTE: Make sure that all items are included by checking against Parts Diagram / Parts List. Do not discard any packaging material before carrying out this check.

WARNING: To avoid injury, do not attempt to run or use this machine until all parts are fitted and working satisfactorily.

Installation

Before assembling and using your lathe, you must have a sturdy bench or stand for it. Alternatively the Record Power® DML24S Leg Set. If you wish to build your own bench, remember that the lathe is heavy (see Specifications for correct weight). The bench must not move during use.

WARNING

Inadequate strength of the bench could result in failure of the bench and falling of the lathe. Serious injury could occur.

WARNING

The lathe must not shift or move. If there is movement when not running, the movement will be exaggerated when turned on. Serious injury could occur. To prevent movement, bolt the bench to the floor and the lathe to the bench.

CAUTION

To avoid back injury, get help lifting the lathe. Bend your knees lift with your legs not your back.

Wiring Instructions

The lathe supplied is fitted with a plug. The wires in the mains lead are coloured in accordance with the following codes.
Green & Yellow: **Earth** Blue: **Neutral** Brown: **Live**

If a new plug is fitted
The green and yellow wire must be connected to the terminal that is marked with the letter ‘E’ or by the earth symbol.
The blue wire must be connected to the terminal which is marked with the letter ‘N’.
The brown wire must be connected the terminal which is marked with the letter ‘L’

Machines for use in the UK are fitted with a BS1363 amp. 3 pin plug. Replacement of the power cable should only be carried out by a qualified electrician.

R.C.D (Residual Current Device)
For your additional safety, we always recommend the use of a residual current breaker, or Earth leakage circuit breaker.

1. Bore 2 holes in the bench 13mm (1/2") dia., 86mm (3.3/8") from the front edge of the bench and 1067mm (42") apart (See Fig.1).

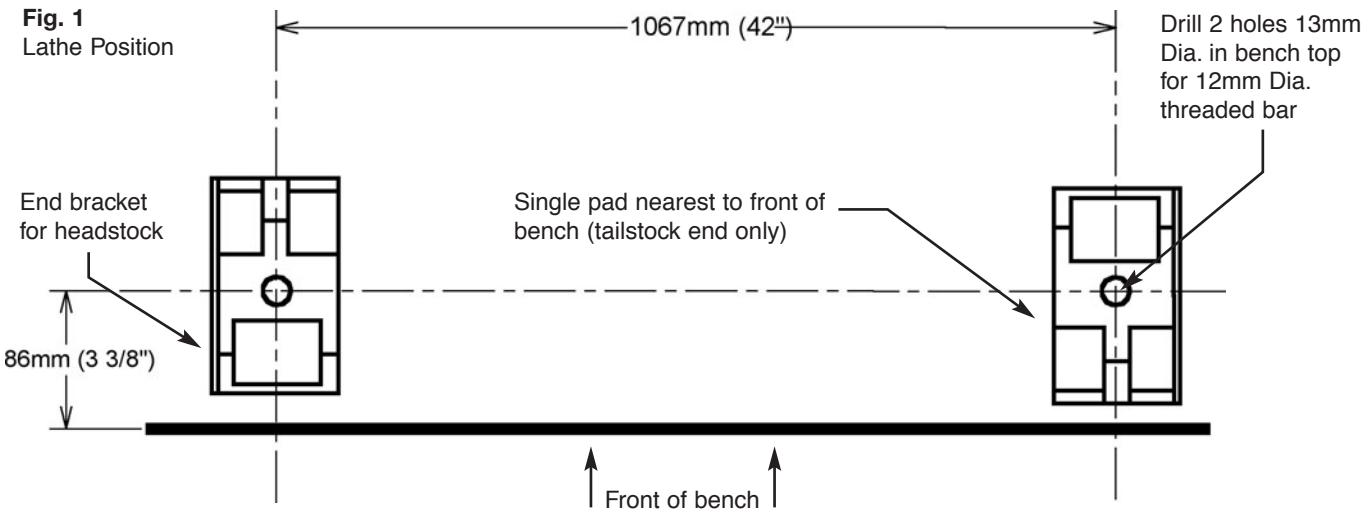

Fig. 1
Lathe Position

2. Position the two end brackets on the bench so that when the long threaded bars are passed through the end brackets they will pass through the corresponding holes in the bench.

3. Place the bed tubes in position butting up to the stop faces on the end brackets.

4. Place each angle strap in position over each end bracket. It should be noted that where the angle strap contacts the bed tube the angle strap has a convex curve giving a single contact on one of the bed tubes, and a concave curve giving two contacts on the other bed tube. The angle strap placed at the right hand end of the bed should have the single contact on the front bed tube, and the angle strap placed at the left hand end of the bed should have the double contact on the front tube.

5. Ensure that the two pairs of contact points between the left hand bracket and the back bed tube, also the right hand bracket and the front bed tube are in full contact, then bolt the angle straps, bed tubes and end brackets down to the bench using the long threaded bars, nuts and washers provided.

6. Mount the headstock on to the bed tubes.

7. Note that the square straps have single and double contact points with the bed tubes. Thread the bolt through a square strap and up through the hole in the headstock arranging for the two contact points of the square strap to clamp on to the front bed tube, and the single contact point to clamp on to the back bed tube. Assemble the washer and nut to the headstock bolt and tighten.

8. Remove the ratchet handle and washer from the stud on the side of the headstock, and open the belt guard. Feed the motor into the headstock, locating the motor pivot pin in the recess and the stud in the slot in the motor plate. Replace the ratchet handle and washer on the stud, position the belt over the appropriate pulleys (see speed chart section 6), and apply slight downward pressure on the motor to obtain correct belt tension, then tighten the handle.

9. Mount the tailstock on to the bed tubes.

10. Thread the tailstock bolt through a square strap and up through the hole in the headstock. Arrange for the two contact points of the square strap to clamp on to the front bed tube, and the single contact point to clamp on the back bed tube. Assemble the washer and nut on to the tailstock bolt and tighten.

11. Mount the banjo on to the bed tubes.

12. Thread the banjo bolt through a square strap and up through the slot in the banjo. Assemble the washer and nut on to the bolt and tighten.

13. Fit the tool rest into the banjo and tighten the handle.

14. Fit the 2-spur centre into the main spindle, and the 90º back centre into the tailstock barrel.

15. Ensure that the grub screws in the two belt pulleys are fully tightened (two grub screws in each tapped hole). It is advisable that these should be checked periodically, use a 3mm hexagonal wrench.

Adjustments

16. Adjustment of the tailstock along the bed tubes is obtained by slackening the nut in the cavity in the back of the tailstock with a wrench, and sliding the tailstock to the desired position, then lock firmly in position. When working between centres, the tailstock centre is positioned in the workpiece by means of the tailstock hand wheel, the barrel is then locked in position by means of a plastic knob on the back of the tailstock.

17. Adjustment of the banjo on the bed tubes is obtained by slackening the nut above the slot in the banjo and moving the banjo to the desired position, (it will move more freely if the bolt is pushed up from below), then locking firmly.
Ensure that the banjo base overlaps outside the centre lines of the bed tubes.

18. Adjustment of the tool rest is obtained by slackening the ratchet handle in the near side of the banjo and moving the tool rest to the desired position, then locking firmly.

19. Always ensure that the above mentioned adjustments have been followed by firm clamping before starting the machine, and always turn the workpiece by hand to ensure it will not foul any part of the machine.

20. If the lathe is on a bench that is warped or uneven, the effect will be to throw the headstock and tailstock centres into misalignment. Correct by placing a spirit level across the bed tubes, firstly at headstock end, then at tailstock end to determine the degree of correction required. Place packing strips either under the front of one of the end brackets or the back, depending on the direction of correction required to give identical spirit level readings at both ends of the bed. When both readings are identical, the centres will be aligned.

5. Control Identification & Function

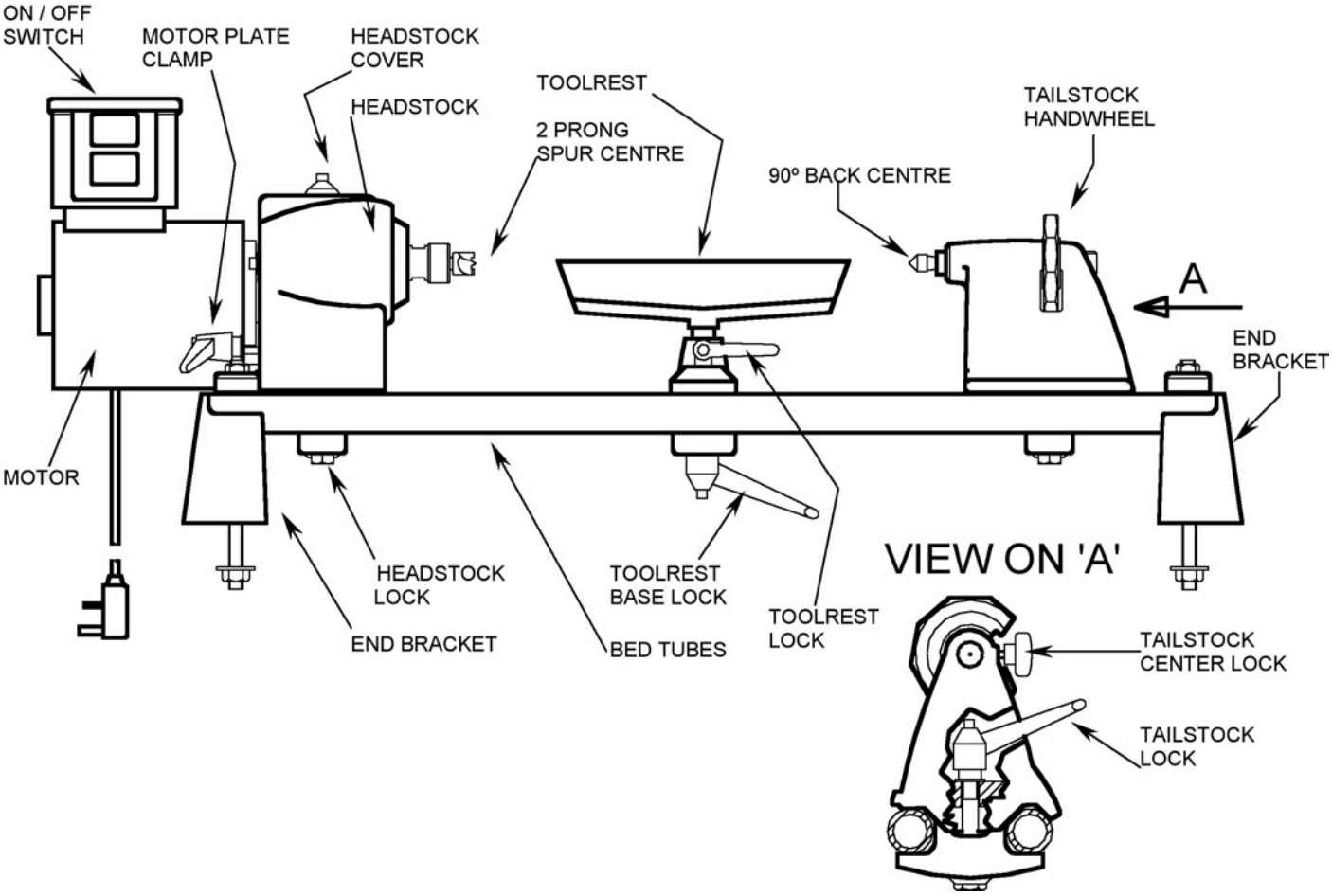

CONTROL	FUNCTION	OPERATION / COMMENT
ON / OFF Switch	Starts and Stops Motor.	No Volt Release switch Green (1) START, Red (0) STOP. If power supply is interrupted during operation lathe will not restart until START button is pressed.
Tool rest	Supports turning tool	Position as per lathe safety instructions (section 2, part 5)
2 Prong drive	Holds and drives workpiece for spindle turning	Provides driving force from motor. Firm contact required.
90º Back centre	Supports free end for spindle turning	Provides support for end of spindle which is not driven.
Headstock lock	Locks headstock to bed tubes.	Lock from inside headstock using a 19mm (3/4”) wrench. Turn clockwise to lock . Locate and lock firmly before mounting workpiece.
Toolrest lock	Locks toolrest post into base	Turn clockwise to lock.
Toolrest base lock	Locks toolrest base to bed tubes	Turn clockwise to lock
Tailstock lock	Locks tailstock to bed tubes	Turn right to lock. Position tailstock along bed tubes before locking
Motor plate clamp	Locks motor when belt is tight.	Loosen to adjust belt for selected speeds. Tighten when belt is properly positioned.
Tailstock handwheel	Moves 90º back centre into workpiece	Rotate clockwise to move 90º back centre towards workpiece.
Tailstock centre lock	Locks 90º back centre	Turn clockwise to lock after positioning 90º back centre with handwheel.

6. Procedure For Changing Speed

WARNING

It is normal for the motor to run hot, therefore care should be taken to avoid touching the motor particularly when changing speed.

WARNING

Ensure belt guard is in place and locked before using lathe. Loose items, clothing or hands may enter opening and become entangled in rotating parts. Serious injury could occur.

1. Switch off and disconnect plug from power supply.

2. Open the guard.

3. Release the motor plate ratchet handle.

4. It is important to handle the motor pulley to release the belt tension since the motor casing may become very hot.
When moving between middle and low speed, use your left hand to pull the motor pulley towards you and move the belt to the appropriate position with the right hand.
When moving between middle and high speed, use your right hand to pull the motor pulley towards you and move the belt with the left hand.

5. Allow the motor to fall back into position.

6. Turn the main spindle by hand to ensure the proper bedding of the belt.

7. Apply slight downward pressure to the motor pulley, and tighten the motor plate ratchet handle.

8. Close and secure the guard.

Speed Chart

Speed min-1 (RPM)	Motor Pulley	Main Spindle Pulley
450	4	8
950	3	7
1500	2	6
2000	1	5

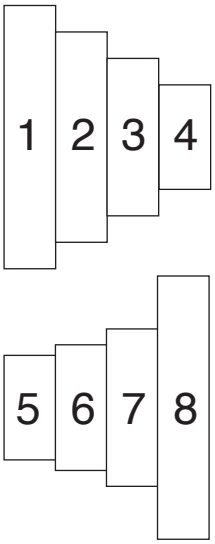

MOTOR SPINDLE

MAIN SPINDLE

7. Procedure For Changing Belt

1. Switch off and disconnect plug from power supply.

2. Ensure that the thread protector is on the spindle nose.

3. Open the belt guard.

4. Remove the locking grub screw from the spindle pulley. Unscrew the bottom grub screw a few turns so that the pulley will slide freely along the full length of the spindle.

5. Remove the socket head cap screw and washer from the left hand end of the spindle.

6. Obtain a piece of brass or similar material softer than mild steel, of a diameter between 11mm (7/16") and 13mm (1/2"), place at the left hand end of the spindle and carefully tap with a hammer, driving the spindle through to the right until it becomes sufficiently free to allow the belt to be changed.

7. Change the belt.

8. If the large bearing is still in the headstock then the spindle should be tapped back in position using a piece of wood between the hammer and the thread protector. If the large bearing has come out with the spindle, then it should be replaced by tapping the outer ring only, tapping round the ring to ensure it seats squarely. If the small bearing has been pushed out by the previous operation, then this also should be tapped back on the outer ring only.

9. Replace the socket head cap screw and washer (do not over tighten).

10. Position the spindle pulley so as to line up with the motor pulley. Tighten the spindle pulley bottom grub screw, ensuring that it locates on the spindle flat, then replace the locking grub screw.

11. With the belt in position and the guard closed, the machine should be run for a short time to enable the belt to bed in.

8. Spare Part Identification

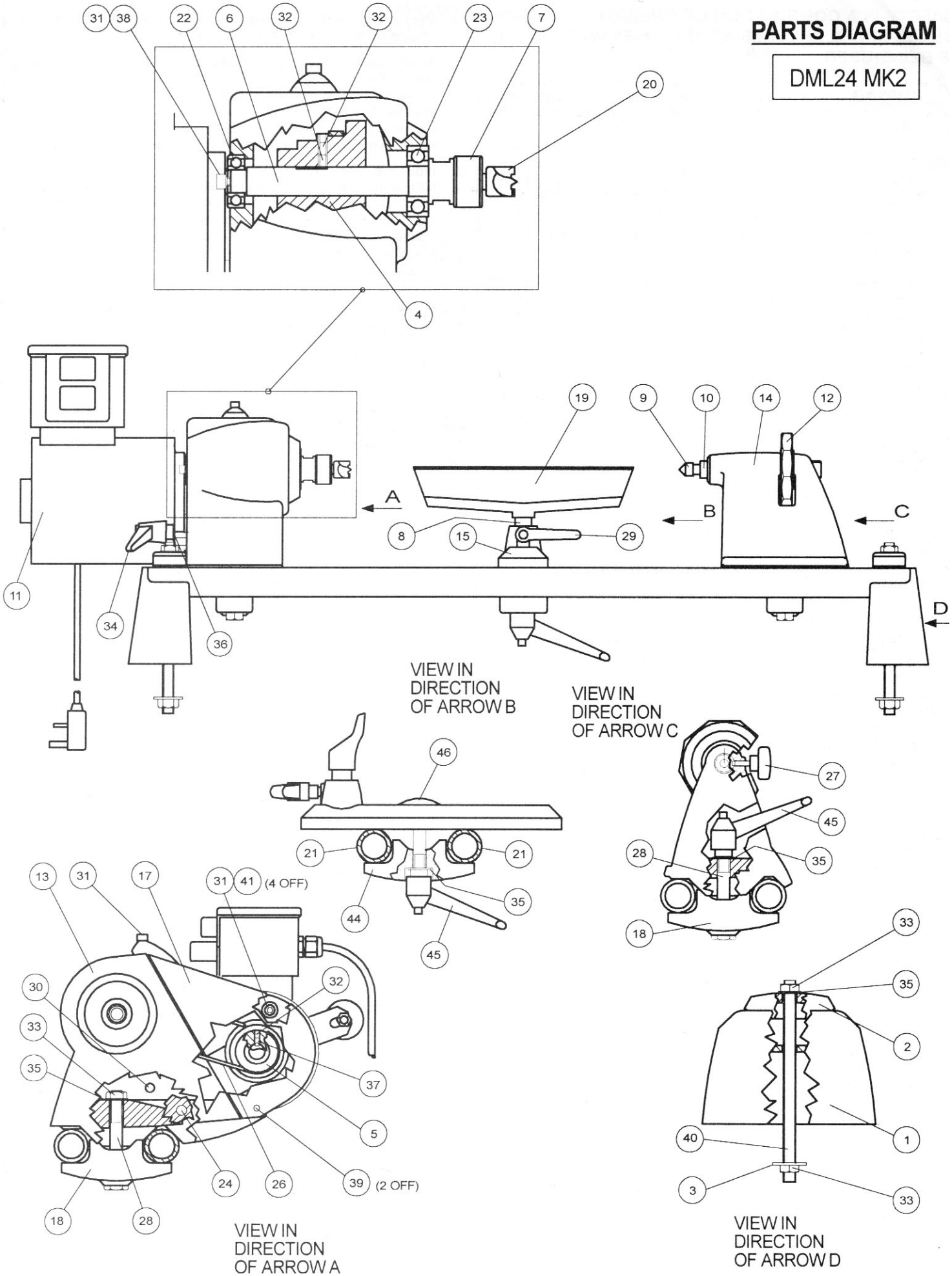

Item No.	Part No.	Description	Qty
1	ZBD	End bracket	2
2	ZBH	Angle strap	2
3	ZAES	Washer – M12 large	2
4	CKSM	Spindle pulley – 4 speed	1
5	CKMM	Motor pulley – 4 speed	1
6	ZBQ	Main spindle	1
7	ZCP	Thread protector	1
8	ZBW	Toolrest stem	1
9	ZPN	90º Back centre	1
10	ZBR	Tailstock barrel	1
11	BOPM	Motor, Motor Plate, Switch, Cable & Plug (U.K.) For replacement for other than U.K. please specify	1
12	ZBA	Handwheel	1
13	ZBB	Headstock	1
14	ZBC	Tailstock	1
15	ZBE	Tool rest base	1
17	ZBJ	Belt guard	1
18	ZBT	Square strap	1
19	ZCF	10” Toolrest	1
20	ZPI	5/8” 2 Prong centre	1
21	ZBP	Bed tube	2
22	ZABD	Bearing – 6202ZZ	1
23	ZABE	Bearing – 6204ZZ	1
24	ZBS	Motor plate pivot	1
25	ZCA	Pry bar #	1
26	ZBO	Poly V-belt, 4 rib	1
27	CLKB	M6 Dog point knob	1
28	ZABG	M12 x 90mm High tensile hex. bolt	1
29	CLRC	M8 Ratchet handle - Toolrest	1
30	ZABI	M10 x 35mm Threaded bar	1
31	ZABK	M6 x 18mm Socket head cap screw	6
32	ZABL	M6 x 8mm Socket grub screw	3
33	ZABM	Nut – M12	5
34	CLRG	M10 Ratchet handle	1
35	ZABO	Washer – M12	7
36	ZABP	Washer – M10	1
37	ZABR	M6 x 10mm dog point grub screw	1
38	ZABS	Bellville washer	1
39	ZABT	M6 x 20mm Sellock pin	3
40	BOAF	M12 x 210mm Threaded bar	2
41	ZAEW	Washer – M6	4
42	ZACJ	3mm Hexagonal wrench #	1
43	ZADA	5mm Hexagonal wrench #	1
44	CKPS	Plain strap	2
45	CKRH	M12 Ratchet handle	2
46	CKCB	M12 x 80mm Cup Square	1

 # Denotes not illustrated in parts diagram

EU Declaration of Conformity

Cert No: EU / ALL LATHES / 6

RECORD POWER LIMITED, at Unit B, Adelphi Way, Ireland Industrial Estate, Staveley S43 3LS declares that the machinery described:-

1. Type: **Woodworking Lathe**

2. Model No: **DML24X-MK2**

3. Serial No .....

Conforms with the following directives:-

MACHINERY DIRECTIVE (repealing / replacing Directives	98/37/EC 89/392/EEC 91/368/EEC 93/44/EEC 93/68/EEC)
LOW VOLTAGE DIRECTIVE and its subsequent amendment	73/23/EEC 93/68/EEC
ELECTRO-MAGNETIC COMPATIBILITY DIRECTIVE and its subsequent amendments	89/336EEC 92/31EEC 93/68EEC

and complies with the relevant essential health and safety requirements.

Signed.....Dated: **20/10/03**

Andrew Greensted
Managing Director